MODEL NO. GXR236DS

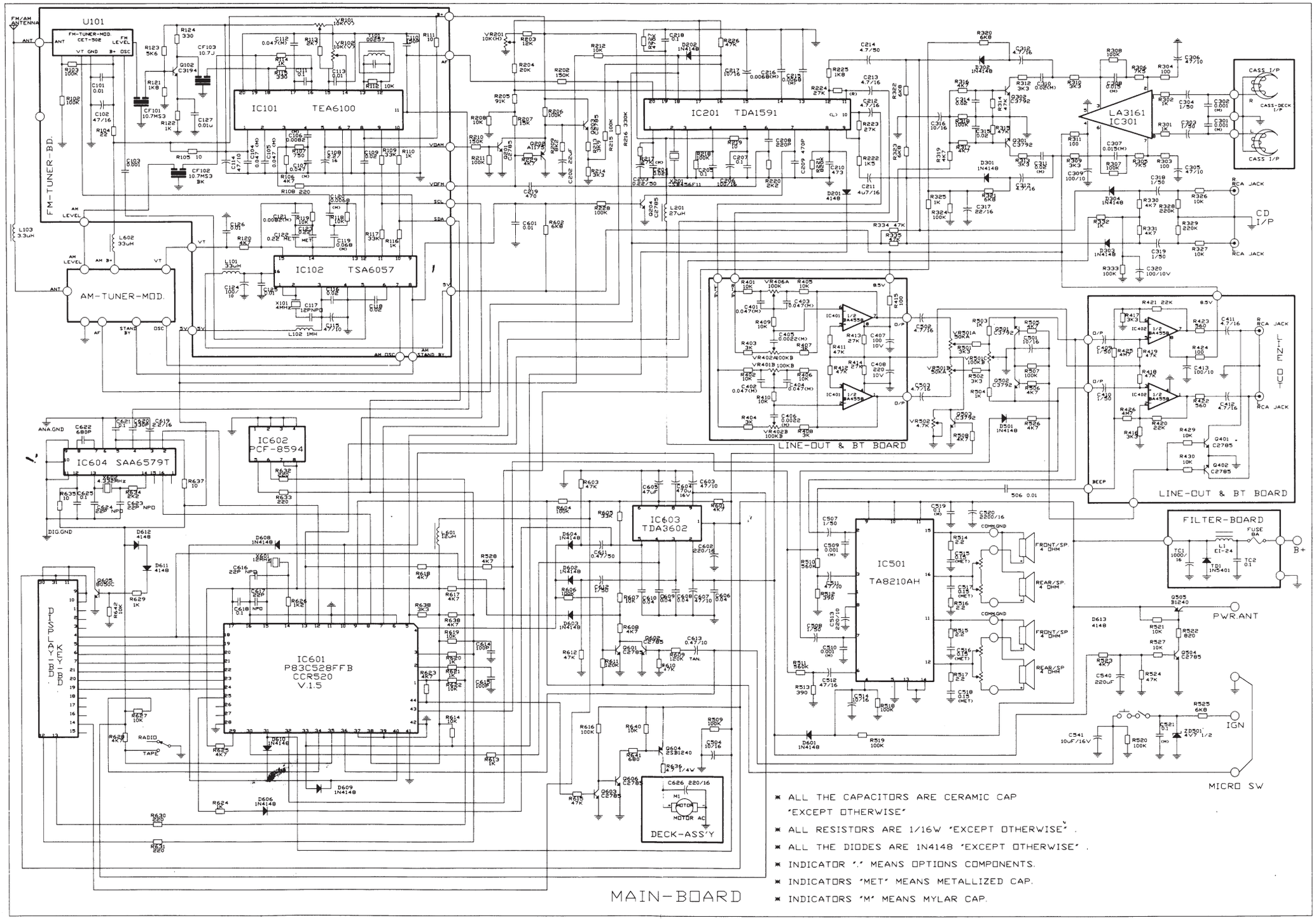

* ALL THE CAPACITORS ARE CERAMIC CAP "EXCEPT OTHERWISE"
* ALL RESISTORS ARE 1/16W "EXCEPT OTHERWISE".
* ALL THE DIODES ARE 1N4148 "EXCEPT OTHERWISE".
* INDICATOR "." MEANS OPTIONS COMPONENTS.
* INDICATORS "MET" MEANS METALLIZED CAP.
* INDICATORS "M" MEANS MYLAR CAP.